PiezoDrive

PD200 – Power Amplifier

Version 8

Manual and Specifications

Contents

1 Introduction 3
2 Warnings / Notes 3
3 Specifications 4
4 Output Voltage Range 5
5 Output Current 5
6 Voltage Limits 5
7 Pulse Current Option 6
8 Power Bandwidth 7
9 Small Signal Bandwidth 9
10 Noise 10
11 Front Panel 11
12 Rear Panel 12
13 Amplifier Configuration 13
14 Bridged Mode 14
15 Overload and Shutdown 15
16 Output Connections 15
16.1 HV Output Screw Terminals 15
16.2 LEMO OB Cable Assembly 16
17 Enclosure 17
18 Warranty 17

1 Introduction

The PD200 is a high bandwidth, low noise linear amplifier for driving piezoelectric actuators. The output voltage range can be unipolar, bipolar, or asymmetric from 50V to 200V. Up to +/-200V can be achieved in the bridged configuration. The PD200 can drive any load impedance including unlimited capacitive loads such as stack actuators; standard piezoelectric actuators; two wire benders; and three-wire piezoelectric benders requiring a bias voltage.

Configuration options include the voltage range, polarity, and output current. The voltage range can also be limited by two user-accessible potentiometers. The PD200 is suited to a wide range of applications including electro-optics, ultrasound, vibration control, nanopositioning systems, and piezoelectric motors.

There are four output connectors including Lemo 00, Lemo 0B, BNC, and screw terminals that allow the direct connection to almost any commercially available piezoelectric actuator. A rear-panel connector also provides a temperature output, overload monitor, and external shutdown input.

Compatible Actuators	
Stack Actuators	50V to 200V
Plates and Tubes	up to +/-100V
Two Wire Benders	up to +/-100V
Three Wire Benders	0 to 200V with 200V bias
Three Wire Benders	+/-100V with +/-100V bias

2 Warnings / Notes

This device produces hazardous potentials and requires suitably qualified personnel with an observer trained in first-aid training. Do not operate the device when there are exposed conductors.

3 Specifications

Electrical Specifications			
Output Voltage Range	100 Vp-p	150 Vp-p	200 Vp-p
RMS Current	1.2 A	0.91 A	0.57 A
Pulse Current	10.0 A	10.0 A	10.0 A
Power Bandwidth	470 kHz	310 kHz	230 kHz
Gain	20 V/V		
Slew Rate	150 V/us		
Signal Bandwidth	680 kHz		
Max Power	60 W Dissipation		
Load	Any		
Noise	714 uV RMS (10uF Load, 0.03 Hz to 1 MHz)		
Protection	Continuous short-circuit, thermal		
Voltage Monitor	1/20 V/V (BNC)		
Current Monitor	1 V/A (BNC)		
Analog Input	+/-10V (BNC, Zin = 27k)		
Output Connectors	LEMO 0B, LEMO 00, Screw Terminals, BNC		
Power Supply	90 Vac to 250 Vac		

Mechanical Specifications	
Environment	0-40 C (32-104 F) Non-condensing humidity
Dimensions	275 x 141 x 64 mm (10.8 x 5.5 x 2.5 in)
Weight	1 kg (2.2 lb)

4 Output Voltage Range

The desired output voltage range is specified when ordering. The default output range is 0V to +200V (PD200-V0,200). The available voltage ranges and associated current limits are listed below.

Voltage Range	RMS Current	Peak Current	Order Code
0 to +200	0.57 A	2 A	PD200-V0,200
0 to +150	0.91 A	2 A	PD200-V0,150
0 to +100	1.20 A	2 A	PD200-V0,100
0 to +50	1.20 A	2 A	PD200-V0,50
-50 to +150	0.57 A	2 A	PD200-V50,150
-50 to +100	0.91 A	2 A	PD200-V50,100
-50 to +50	1.20 A	2 A	PD200-V50,50
-100 to +100	0.57 A	2 A	PD200-V100,100
-100 to +50	0.91 A	2 A	PD200-V100,50

Table 1. Voltage range configurations

5 Output Current

The PD200 has a peak and average current limit as described in Table 1. The RMS current limit defines the maximum frequency that is achievable with a capacitive load. This topic is discussed in “Power Bandwidth”.

During short-circuit the output current is limited to the rated maximum. The peak current can be drawn for up to five milliseconds before the output is disabled for three seconds. The average current limit has a time-constant of 30 milliseconds and is reset 100 milliseconds after a previous current pulse. This behaviour is described in “Overload and Shutdown”.

6 Voltage Limits

The output voltage range can be restricted to an arbitrary positive and negative value using two potentiometers accessed from a pair of holes on the bottom panel. By gently turning the potentiometers clockwise with a 2-mm flat-head screwdriver, the full voltage range becomes available. The voltage range is reduced by turning the potentiometers anti-clockwise. The hole closest to the front panel controls the negative voltage range while the rear hole controls the positive range.

7 Pulse Current Option

For applications that require a high peak current, the peak current limit can be increased to 10 Amps by appending the order code with “-PULSE”, e.g. “PD200-V0,200-PULSE”. In this configuration, the average current limit remains the same; however, the peak current limit is increased to 8 Amps and the maximum pulse duration is reduced to the time listed in Table 2. The voltage span is the peak-to-peak output voltage range, e.g. the voltage span for the -50V to +150V range is 200V.

Voltage Span	Pulse Current	Pulse Time
200 V	10 A	100 us
150 V	10 A	150 us
100 V	10 A	400 us
50 V	10 A	400 us

Table 2. Maximum peak current duration in the pulse configuration

For a current pulse less than the peak current limit, the increased duration is described in Figure 1.

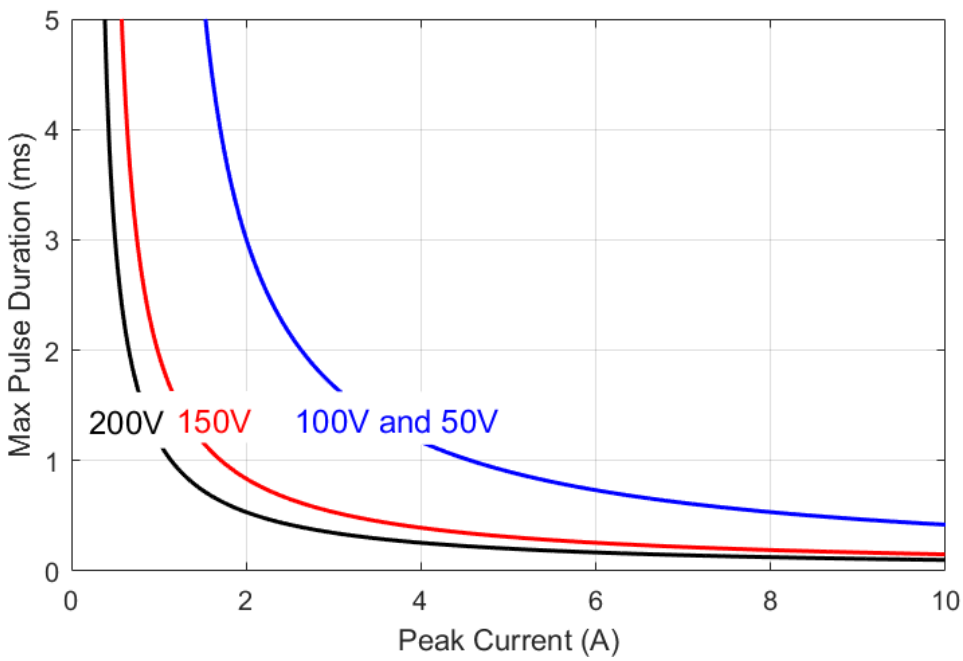

Figure 1. Maximum pulse duration versus peak current and voltage span

8 Power Bandwidth

[Launch Online Power Bandwidth Calculator]

The online power bandwidth calculator takes into account the current limit, slew-rate, output impedance, and small-signal bandwidth.

With a capacitive load, the RMS current for a sine-wave is

$$I_{rms} = \frac{V_{pp} C \pi f}{\sqrt{2}}$$

where V_{pp} is the peak-to-peak output voltage, C is the load capacitance and f is the frequency. Therefore the maximum frequency for a given RMS current limit (I_{rms}), capacitance, and voltage is

$$f_{max} = \frac{I_{rms}\sqrt{2}}{V_{pp} C \pi} \ ,$$

The above equation is also true for any periodic waveform, including triangle waves and square waves. This property arises since the amplifier detects average current, which not affected by the waveform shape.

The 'power bandwidth' is the maximum frequency at full output voltage. When the amplifier output is open-circuit, the power bandwidth is limited by the slew-rate; however, with a capacitive load, the maximum frequency is limited by the RMS current and load capacitance. The power bandwidth for a range of capacitive loads is listed below.

Load Capacitance	50V Range	100V Range	150V Range	200V Range
No Load	520 kHz**	470 kHz*	310 kHz*	230 kHz*
10 nF	520 kHz**	470 kHz*	270 kHz	130 kHz
30 nF	370 kHz	180 kHz	91 kHz	43 kHz
100 nF	110 kHz	56 kHz	27 kHz	13 kHz
300 nF	37 kHz	18 kHz	9.1 kHz	4.3 kHz
1 uF	11 KHz	5.6 kHz	2.7 kHz	1.3 kHz
3 uF	3.7 kHz	1.8 kHz	910 Hz	430 Hz
10 uF	1.1 kHz	560 Hz	270 Hz	130 Hz

Table 3. Power bandwidth versus load capacitance and output voltage span

In the above table, the frequencies limited by slew-rate are marked with an asterisk, and the frequencies limited by small-signal bandwidth are marked with a double asterisk. The slew-rate is approximately 150 V/uS which implies a maximum frequency of

$$f^{max} = \frac{150 \times 10^6}{\pi V_{pp}}$$

In the following figures, the maximum peak-to-peak voltage is plotted against frequency and capacitance.

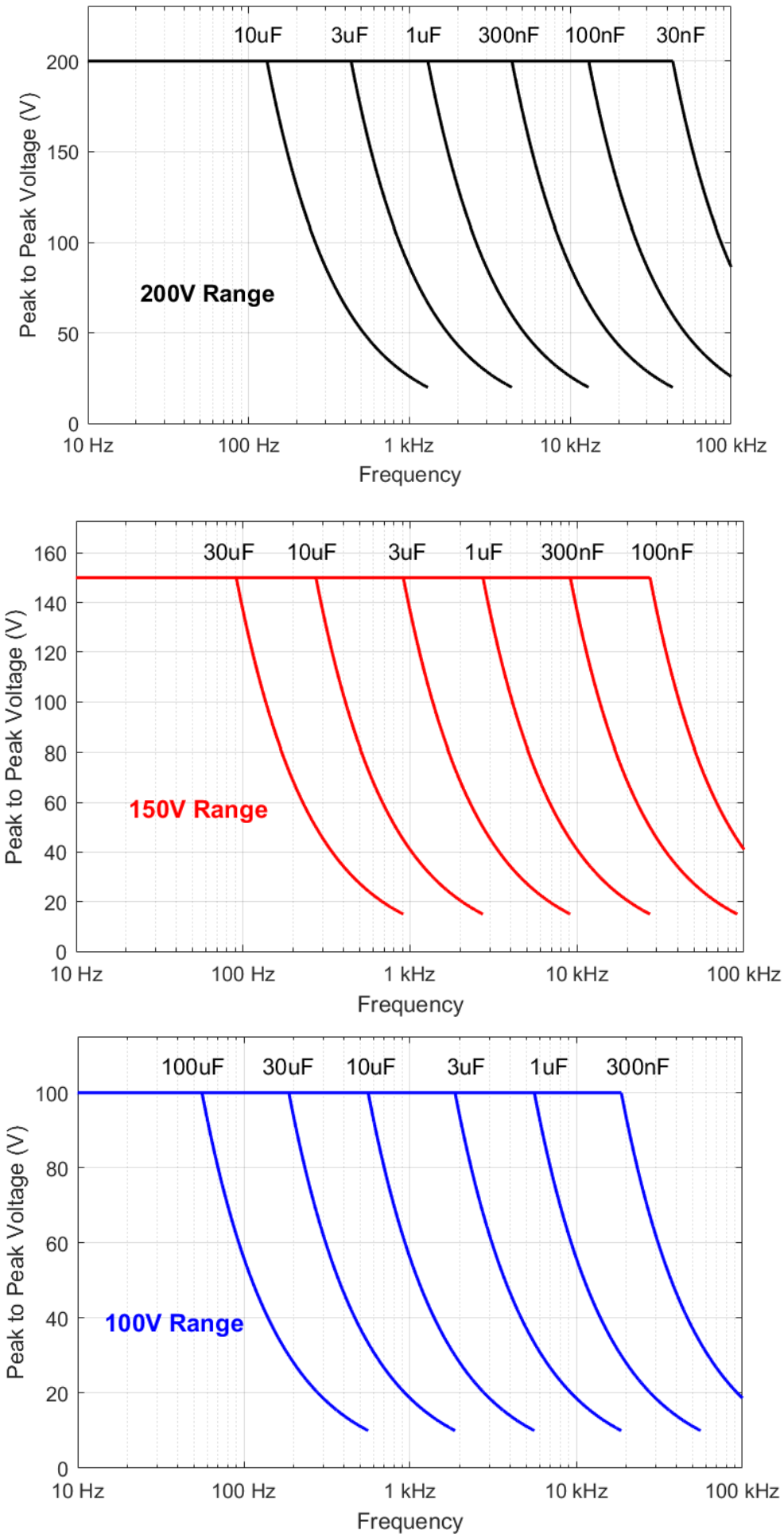

Figure 2. Maximum peak-to-peak voltage versus frequency and load capacitance

9 Small Signal Bandwidth

The small-signal frequency response and -3 dB bandwidth is described in Figure 3 and Table 4.

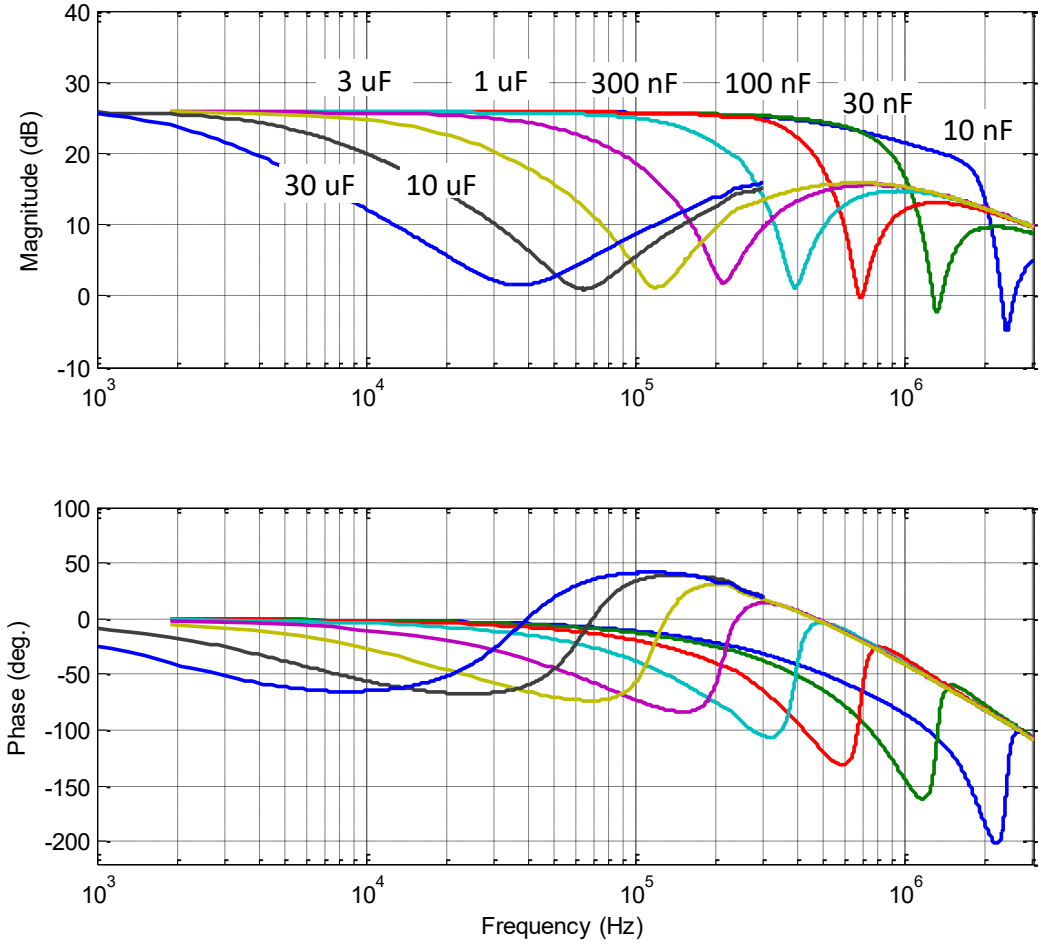

Figure 3. Small signal frequency response for a range of load capacitances.

Load Capacitance	Bandwidth
No Load	684 kHz
10 nF	759 kHz
30 nF	720 kHz
100 nF	388 kHz
300 nF	172 kHz
1 uF	60 kHz
3 uF	21 kHz
10 uF	6.4 kHz
30 uF	2.4 kHz
110 uF	940 Hz

Table 4. Small signal bandwidth versus load capacitance (-3dB)

10 Noise

The output noise contains a low frequency component (0.03 Hz to 20 Hz) that is independent of the load capacitance; and a high frequency (20 Hz to 1 MHz) component that is approximately inversely proportional to the load capacitance.

The noise is measured with an SR560 low-noise amplifier (Gain = 1000), oscilloscope, and Agilent 34461A Voltmeter. The low-frequency noise is plotted in Figure 4. The RMS value is 650 uV with a peak-to-peak voltage of 4.3 mV.

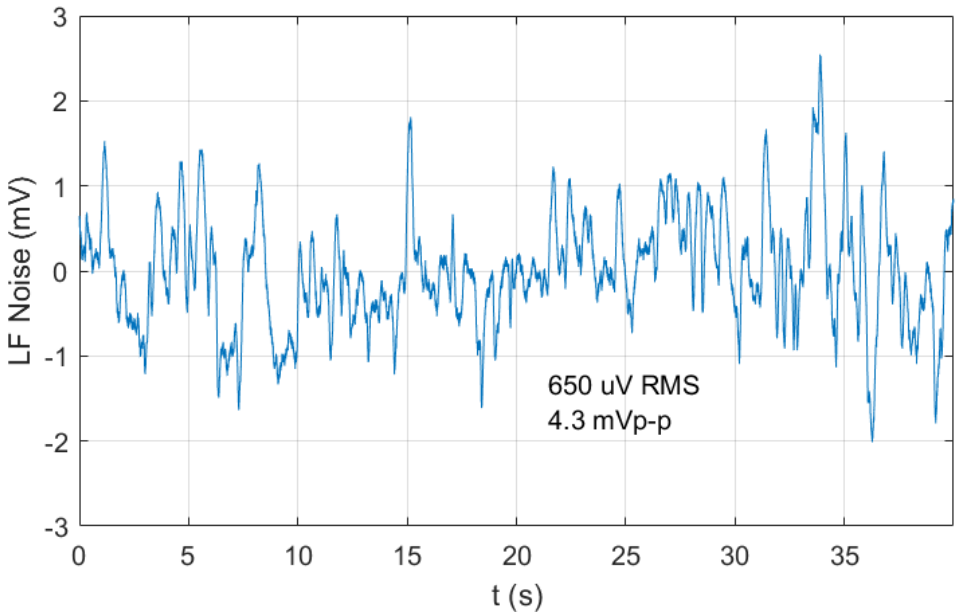

Figure 4. Low frequency noise from 0.03 Hz to 20 Hz

The high frequency noise (20 Hz to 1 MHz) is listed in the table below versus load capacitance. The total RMS noise from 0.03 Hz to 1 MHz is found by summing the RMS values, that is $\sigma = \sqrt{\sigma_{LF}^2 + \sigma_{HF}^2}$.

Load Cap.	Bandwidth	HF Noise RMS	Total Noise RMS
No Load	684 kHz	1.60 mV	1.72 mV
10 nF	759 kHz	1.65 mV	1.77 mV
30 nF	720 kHz	1.75 mV	1.86 mV
100 nF	388 kHz	2.08 mV	2.17 mV
300 nF	172 kHz	2.18 mV	2.27 mV
1 uF	60 kHz	998 uV	1.19 mV
3 uF	21 kHz	414 uV	771 uV
10 uF	6.4 kHz	295 uV	714 uV
30 uF	2.4 kHz	280 uV	708 uV
110 uF	940 Hz	264 uV	702 uV

Table 5. RMS noise versus load capacitance (0.03 Hz to 1 MHz)

11 Front Panel

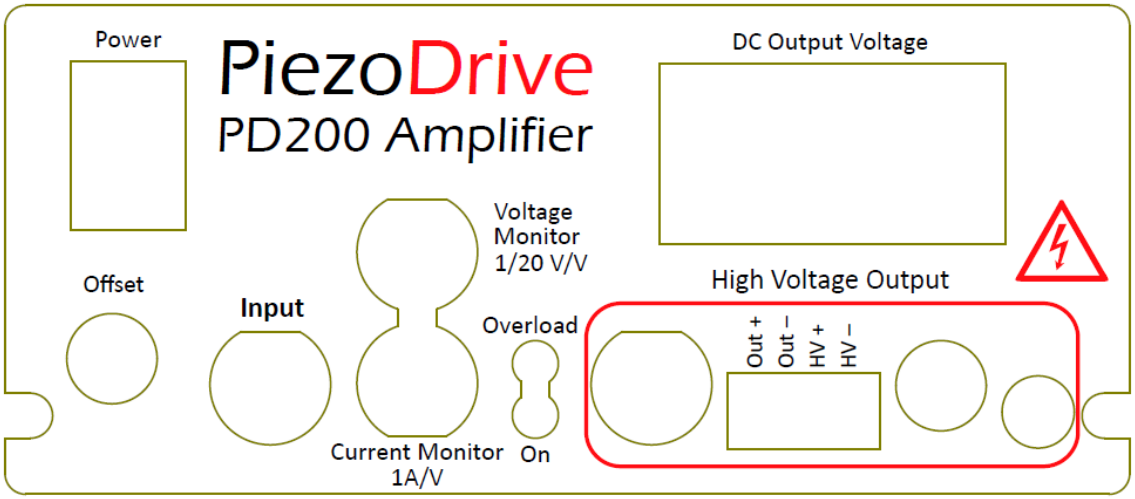

Control	Type	Function
Power		Power On/Off
Offset		Adds a DC offset to the input signal
Input	Input	Input signal (+/-15V max)
Voltage Monitor	Output	The measured output voltage, scaled by 1/20
Current Monitor	Output	The measured output current, 1 A/V
Overload		RED when the amplifier is disabled or in an overload state
Power		GREEN when the power is on
BNC Output	Output	High-voltage output BNC connector, suits male BNC cable plug
HV-	Output	Connected to the negative high-voltage power supply rail
HV+	Output	Connected to the positive high-voltage power supply rail
Output-	Output	High-voltage output signal return (used to measure current)
Output+	Output	High-voltage output signal
LEMO 00 Output	Output	High-voltage output connector, suits LEMO FFA.00.250 cable plug
LEMO 0B Output	Output	High-voltage output connector, suits LEMO FGG.0B.302 cable plug
DC Output Volt.		Display showing average output voltage

The front panel connectors and recommended mating plugs are listed below.

Connector	Mating Connector	Manufacturer	PCB Component
BNC	Any BNC		
4-Way Screw Terminal	TJ0431530000G	Amphenol	OQ0432510000G
LEMO 00	FFA.00.250	LEMO	EPL.00.250
LEMO 0B	FGG.0B.302	LEMO	EPG.0B.302

The LEMO 0B connector is recommended for applications requiring more than 1 Amp RMS output current. Preassembled LEMO cable assemblies are available from www.PiezoDrive.com

12 Rear Panel

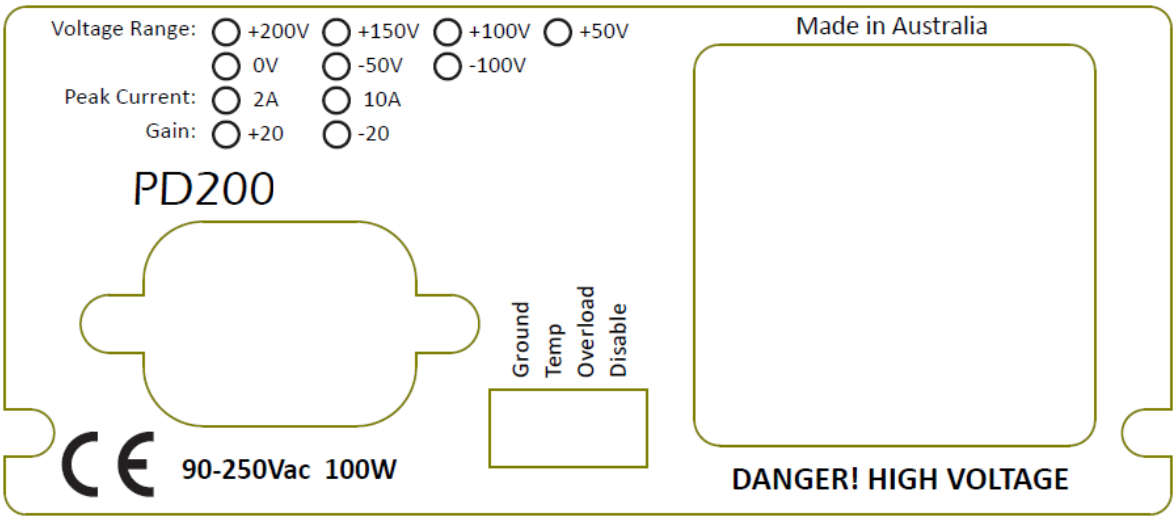

Control	Type	Function
Ground		Ground/Earth
Temp	Output	Internal heatsink temperature, 0.1 V/degree (Celsius)
Overload	Output	+5V output when the amplifier is disabled or in overload state
Disable	Input	A voltage from +3V to +24V disables the amplifier

The rear panel connector and recommended mating plug is listed below.

Connector	Mating Connector	Manufacturer	PCB Component
4-Way Screw Terminal	TJ0431530000G	Amphenol	OQ0432510000G

13 Amplifier Configuration

The amplifier can be configured with an inverting, or non-inverting input.

Amplifier Configuration	Order Code	Notes
Non-inverting		(default)
Inverting	-INV	

Table 6. Amplifier configuration

The DC offset control is configurable with a positive or bipolar range. The maximum achievable DC offset is limited by the output voltage range of the amplifier. In general, the positive DC offset range is recommended as this allows direct selection of zero offset; however, the bipolar range may be preferable for amplifiers configured with a negative output range.

The front panel potentiometer can be disabled by enabling a PCB mounted trim-pot, which is set during production to provide a desired output DC offset voltage.

Offset Configuration	Order Code	Notes
0V to +200V Offset Range		(default)
+/-200V Offset Range	-OR2	
Front panel source		(default)
PCB trim-pot source	-OS2-xxV	xx is the output offset (in Volts)

Table 7. Offset configuration

14 Bridged Mode

In bridged mode, two amplifiers are connected in series to double the output voltage range and power.

For example, Figure 5 shows the configuration to obtain ±200V across the load. A ±5V signal applied to both inputs produces ±200V across the load. In bridged mode, only the **Output+** terminal from each amplifier is used, the negative output terminal is not connected. Since there is no current returning through the negative terminal, the current monitor is disabled; however, the overload and protection features are unaffected. Common bridged-mode configurations are listed in Table 8.

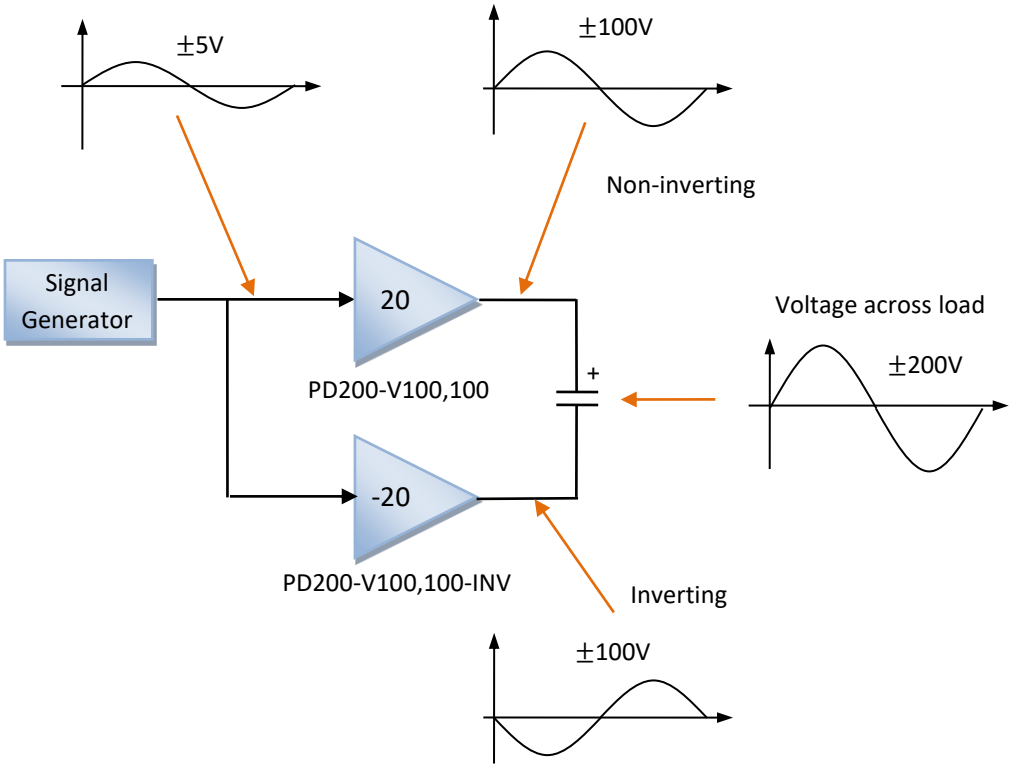

Figure 5. Bridge mode configuration for obtaining ±200V

Load Voltage	RMS Current	Positive Amp	Negative Amp
+/-200V	0.57 A	PD200-V100,100	PD200-V100,100-INV
+/-100V	1.20 A	PD200-V50,50	PD200-V50,50-INV

Table 8. Common bridge-mode configurations

15 Overload and Shutdown

The amplifier is protected against short-circuit, over-current, and excessive temperature. During these conditions, the front panel overload indicator will illuminate and the rear-panel **Overload** signal is +5V.

During an overload or shutdown state, the output is disabled.

When the amplifier is switched on, the overload protection circuit is engaged by default and clears after three seconds.

The amplifier can be shut down by an external source by applying a voltage of between +3V and +24V to the **Shutdown** input on the rear panel. The impedance of the shutdown input is approximately 5 kΩ.

16 Output Connections

16.1 HV Output Screw Terminals

The screw terminal output has contacts for the output voltage, output return, and the internal HV supply rails. The **Output-** signal is connected to ground through a 0.1 Ohm resistor.

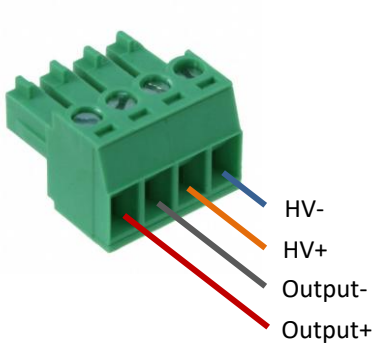

Stack actuators are connected as shown below.

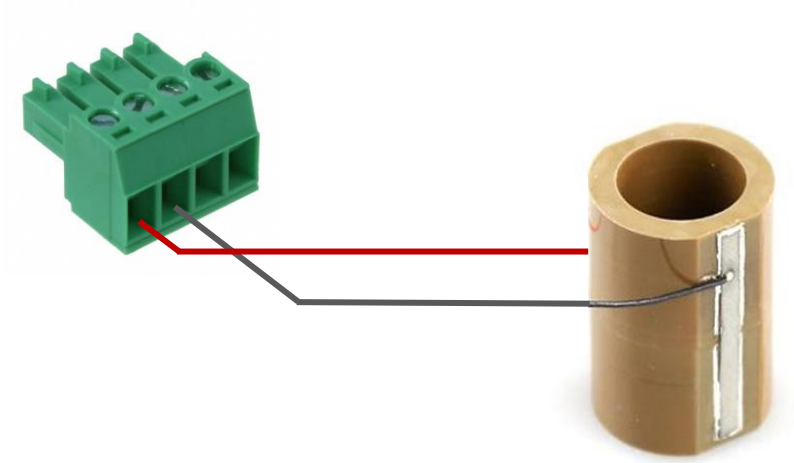

Bender actuators can be driven with a single bias voltage, for example 200 V, or a bipolar bias voltage, for example ±100 V. The ±100 V bipolar configuration is shown below.

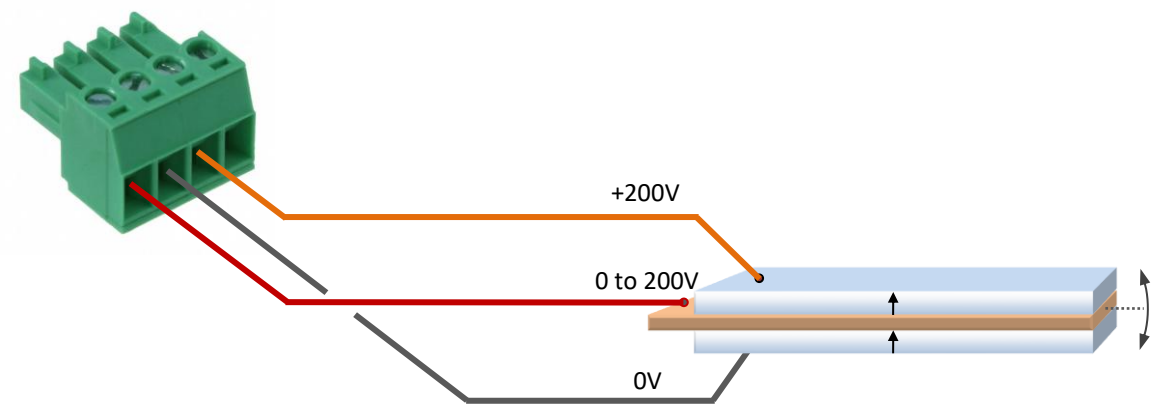

16.2 LEMO OB Cable Assembly

The LEMO 0B socket is the preferred output connector and is rated for 10 Amps RMS. The shield is directly connected to ground, rather than **Output-**.

Preassembled LEMO cable assemblies are available from www.PiezoDrive.com

The recommended cable is Belden 8451. The recommended cable preparation is shown below for solder, and crimp-terminal plugs.

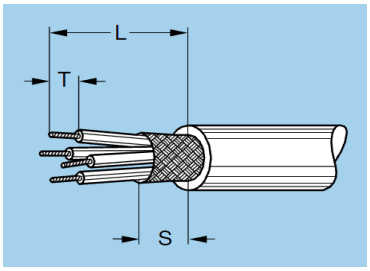

Dimension	Solder Terminals	Crimp Terminals
L (Free Length)	13 mm	17 mm
S (Shield Length)	7 mm	7 mm
T (Strip Length)	3 mm	4 mm

The parts list for the LEMO 0B.302 plug are:

- FGG.0B.302.CLAZ (solder terminals) or FGG.0B.302.CYCZ (crimp terminals)
- FGG.0B.742.DN - collet for 3.1mm to 4mm cable
- GMA.0B.035.DN - strain relief boot for 3.5mm to 3.9mm cable

The plug assembly process is:

1. Strip the cable as above
2. If the cable is shielded, fold the shield back over the cable
3. Slide the strain relief, collet nut (1) and collet (3) onto the cable.
4. Solder or crimp the conductors onto the contacts.
5. Assemble the plug, as shown below.

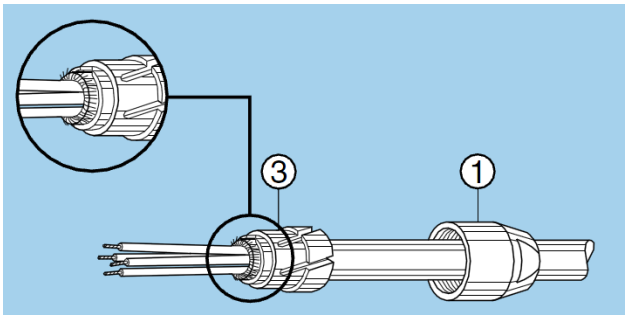

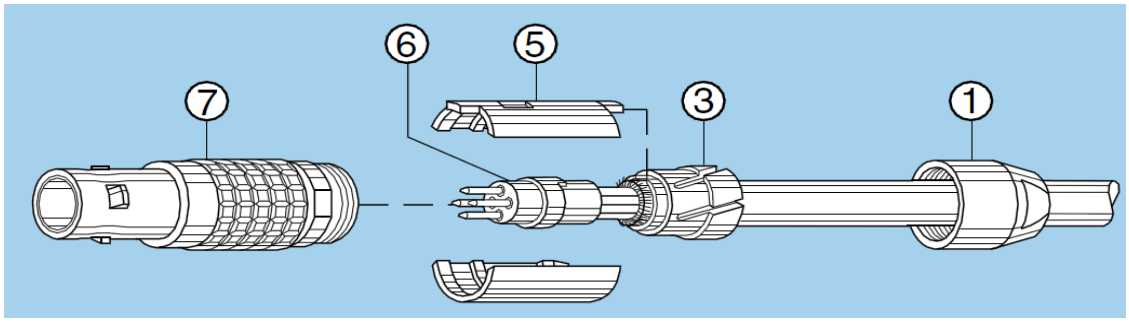

17 Enclosure

The enclosure has a side air intake and rear exhaust, which cannot be obstructed. If sufficient airflow is not available, the amplifier will enter a thermal overload state as discussed in “Overload and Shutdown”.

The PD200 can be rack-mounted in a three channel arrangement as shown below. The order code is PD200-Rack-X, where X is the number or populated channels (from 1 to 3).

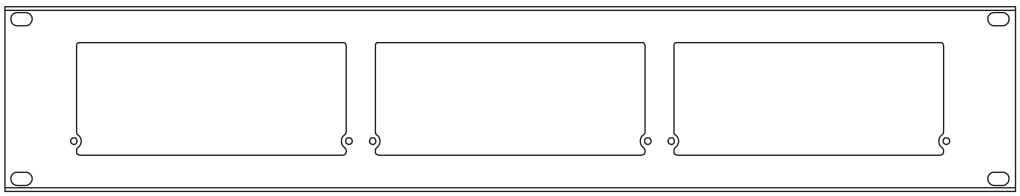

18 Warranty

PiezoDrive amplifiers are guaranteed for 3 months. The warranty does not cover damage due to misuse.